POWER DISTRIBUTION

Component Index

1-2 Shift Solenoid (1-2 SS) Valve
2-3 Shift Solenoid (2-3 SS) Valve
3-2 Shift Solenoid (3-2 SS) Valve
A/C Relay 44
A/T Shift Lever
Air Temperature Actuator-Left
Air Temperature Actuator-Right
Audio Amplifier
Automatic Transmission Shift Lock Actuator
Auxiliary Power Outlet-Console
Auxiliary Power Outlet-Front
Auxiliary Power Outlet-Rear
Blower Motor Control Module
Blower Motor Control Processor-Auxiliary
Blower Motor Resistor Assembly
Blower Motor-Auxiliary
Body Control Module (BCM)
Center High Mount Stoplamp (CHMSL)
Cigar Lighter
Data Link Connector (DLC)
Defrost Actuator
Driver Door Module (DDM)
Electronic Brake Control Module (EBCM)
Evaporative Emission (EVAP) Canister Purge Solenoid (4.2L)
Evaporative Emission (EVAP) Canister Purge Solenoid (5.3L)
Evaporative Emission (EVAP) Canister Vent Solenoid
F/PMP Relay 41
Fan Relay 45
Fog LP Relay 39
Front Axle Actuator
Front Passenger Door Module (FPDM)
Front Wiper Motor
Fuel Injector 1-6 (4.2L)
Fuel Injector 1-8 (5.3L)
Fuse Block-Rear
Fuse Block-Underhood
Fusible Link
Garage Door Opener
Generator (4.2L)
Generator (5.3L)
HDLP-HI Relay 43
HDM Relay 46
Headlamp-Left
Headlamp-Right
Heated Oxygen Sensors (HO2S) (4.2L)
Heated Oxygen Sensors (HO2S) (5.3L)
Horn Relay 40
HVAC Control Module
HVAC Control Module-Auxiliary
IGN 1 Relay 58 (5.3L)
Ignition Coil 1-6 (4.2L)
Ignition Coil 1-8 (5.3L)
Ignition Switch
Inflatable Restraint Sensing and Diagnostic Module (SDM)
Inside Rearview Mirror
Instrument Panel Cluster (IPC)
License Lamp-Left
License Lamp-Right
Liftgate Module (LGM)
Lock Relay 18
Lumbar Adjuster Switch-Driver
Lumbar Adjuster Switch-Passenger
Marker Lamp-LF
Marker Lamp-RF
Mass Air Flow (MAF) Sensor/Intake Air Temperature (IAT) (5.3L)
Memory Seat Module-Driver
Memory Seat Module-Passenger
Mode Actuator
Outside Moisture Sensor
Park LP Relay 30
Park/Neutral Position (PNP) Switch
Park/Turn Signal Lamp-LF
Park/Turn Signal Lamp-RF
Powertrain Control Module (PCM) (4.2L)
Powertrain Control Module (PCM) (5.3L)
Quarter Glass Switch-Left
Quarter Glass Switch-Right
Radio
RAP Relay 22
Rear Wash Relay 38
Recirculation Actuator
Right Front Marker Lamp
Seat Adjuster Switch-Driver
Seat Adjuster Switch-Front Passenger
Starter (4.2L)
Starter (5.3L)
Starter Relay 47
Stop Lamp Switch
Sunroof Module
Tail Lamp Assembly-Left
Tail Lamp Assembly-Right
Throttle Actuator Control (TAC) Module (5.3L)

Preliminary

POWER DISTRIBUTION

Circuit Schematic

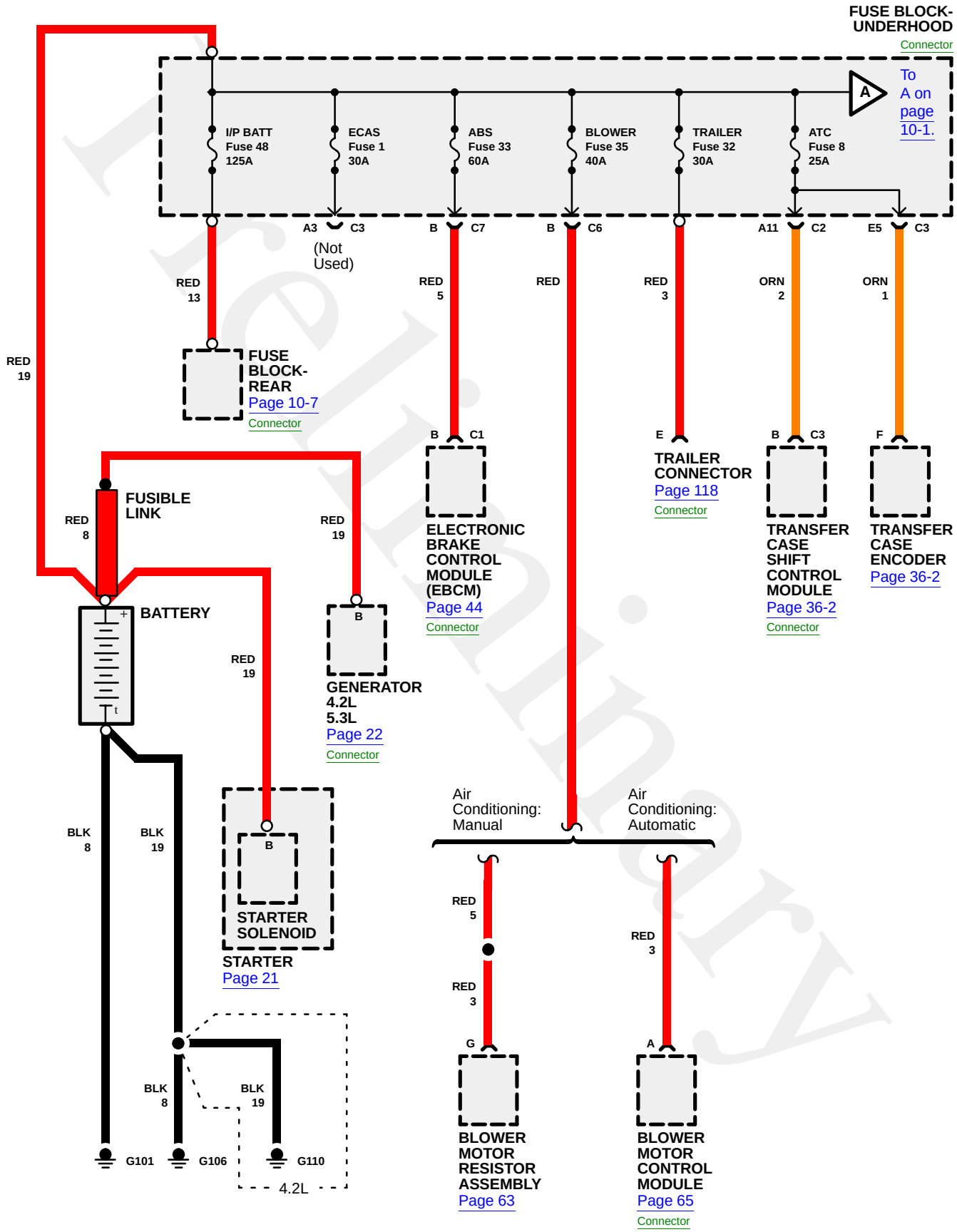

Preliminary

POWER DISTRIBUTION

Circuit Schematic

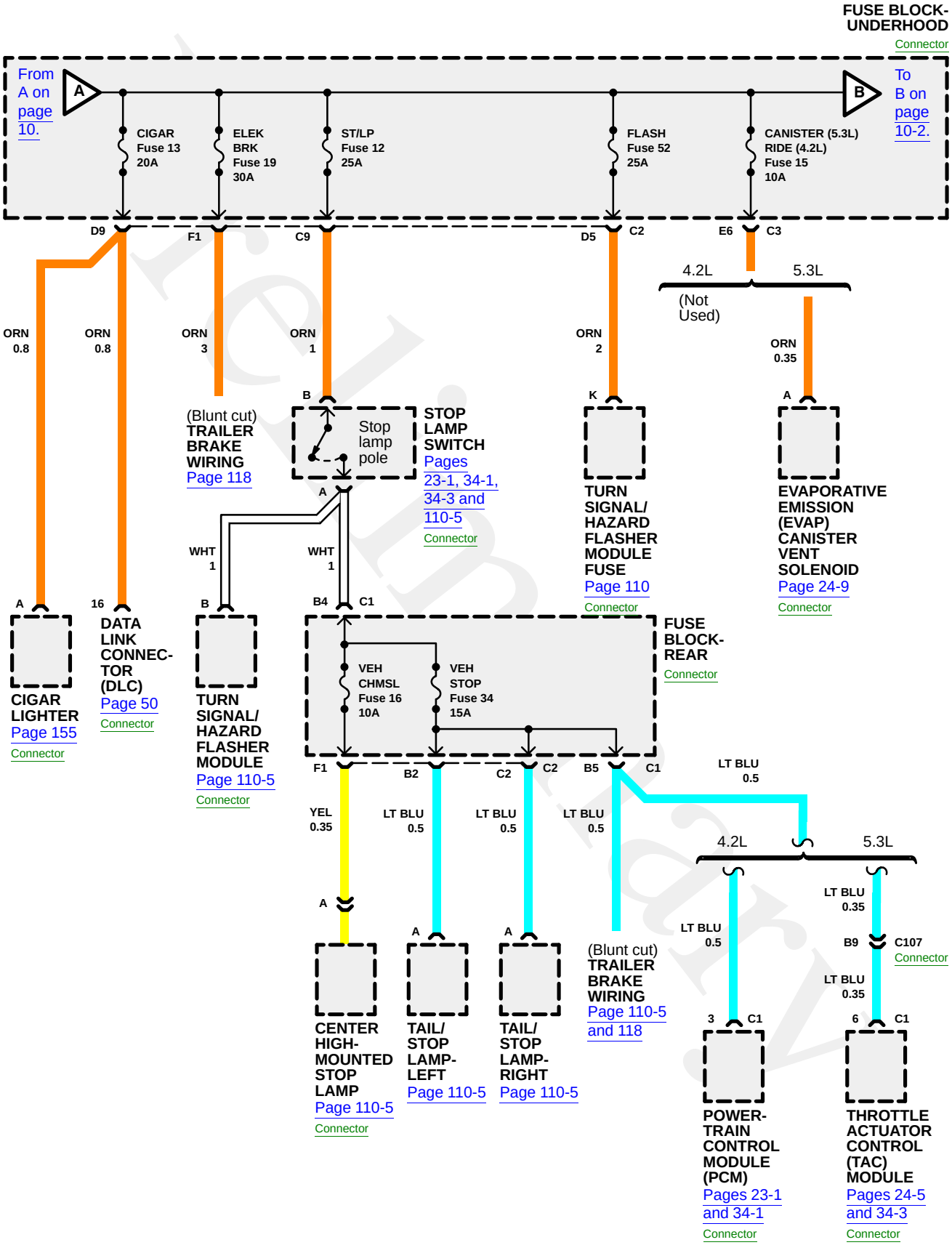

POWER DISTRIBUTION

Circuit Schematic

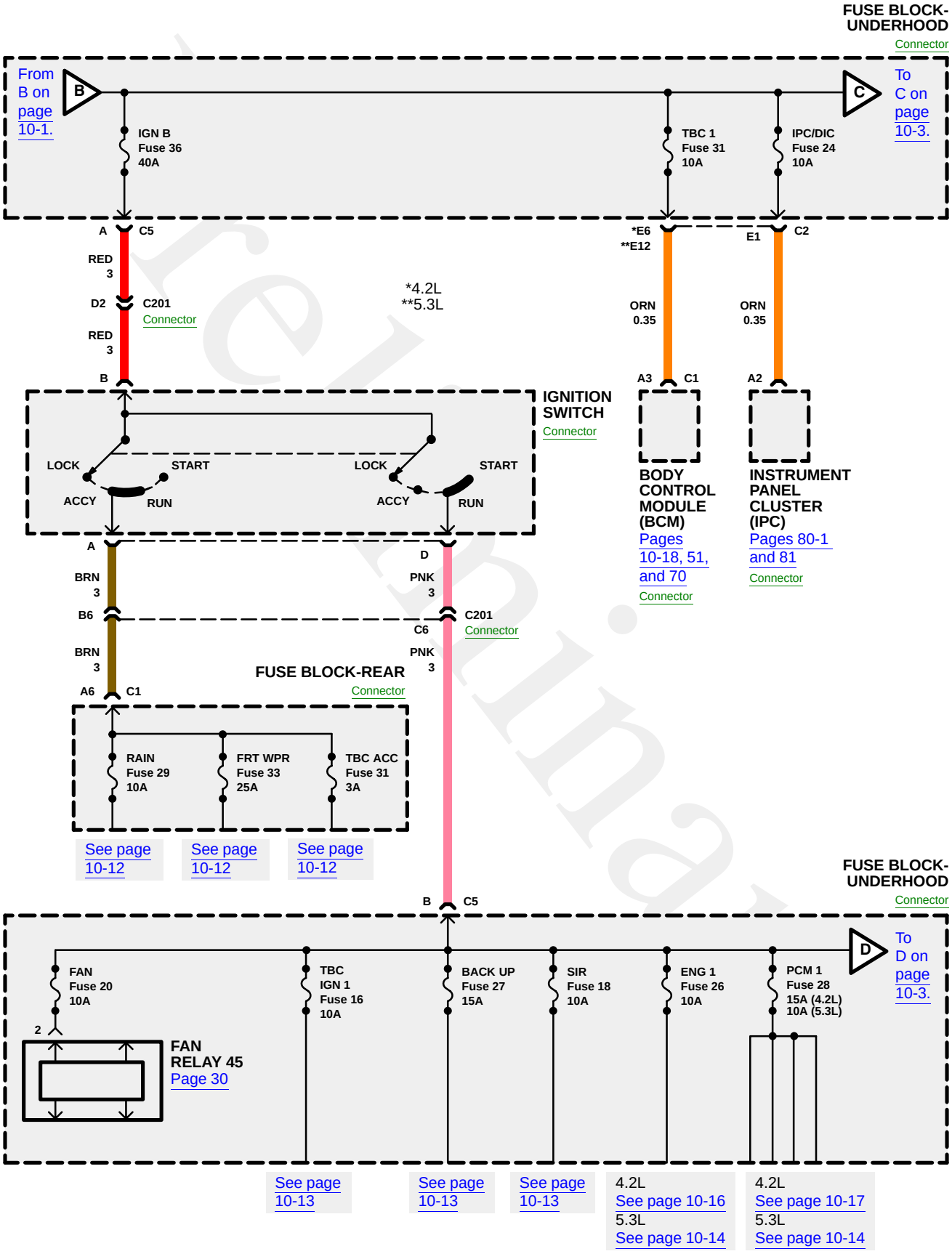

POWER DISTRIBUTION

Circuit Schematic

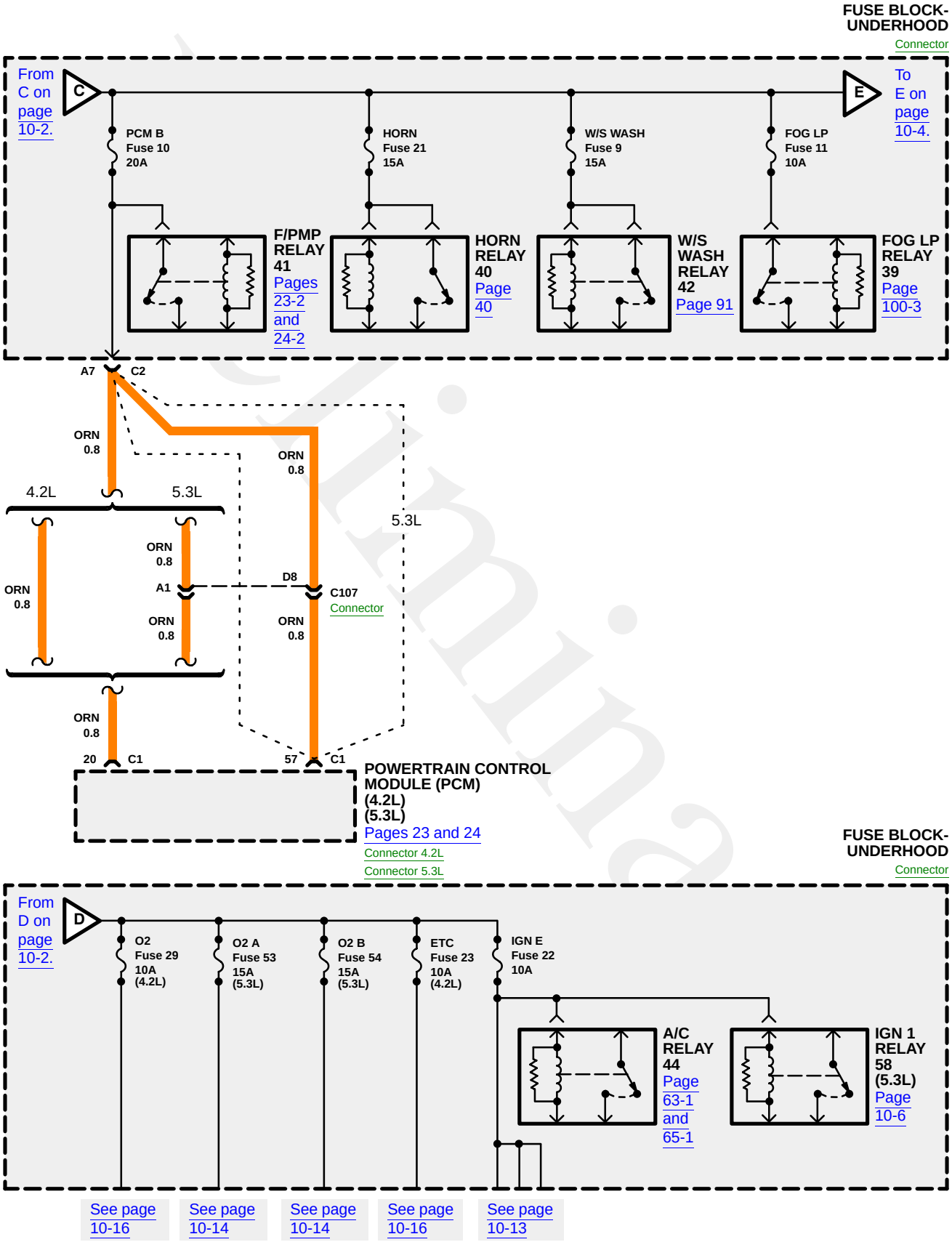

POWER DISTRIBUTION

Circuit Schematic

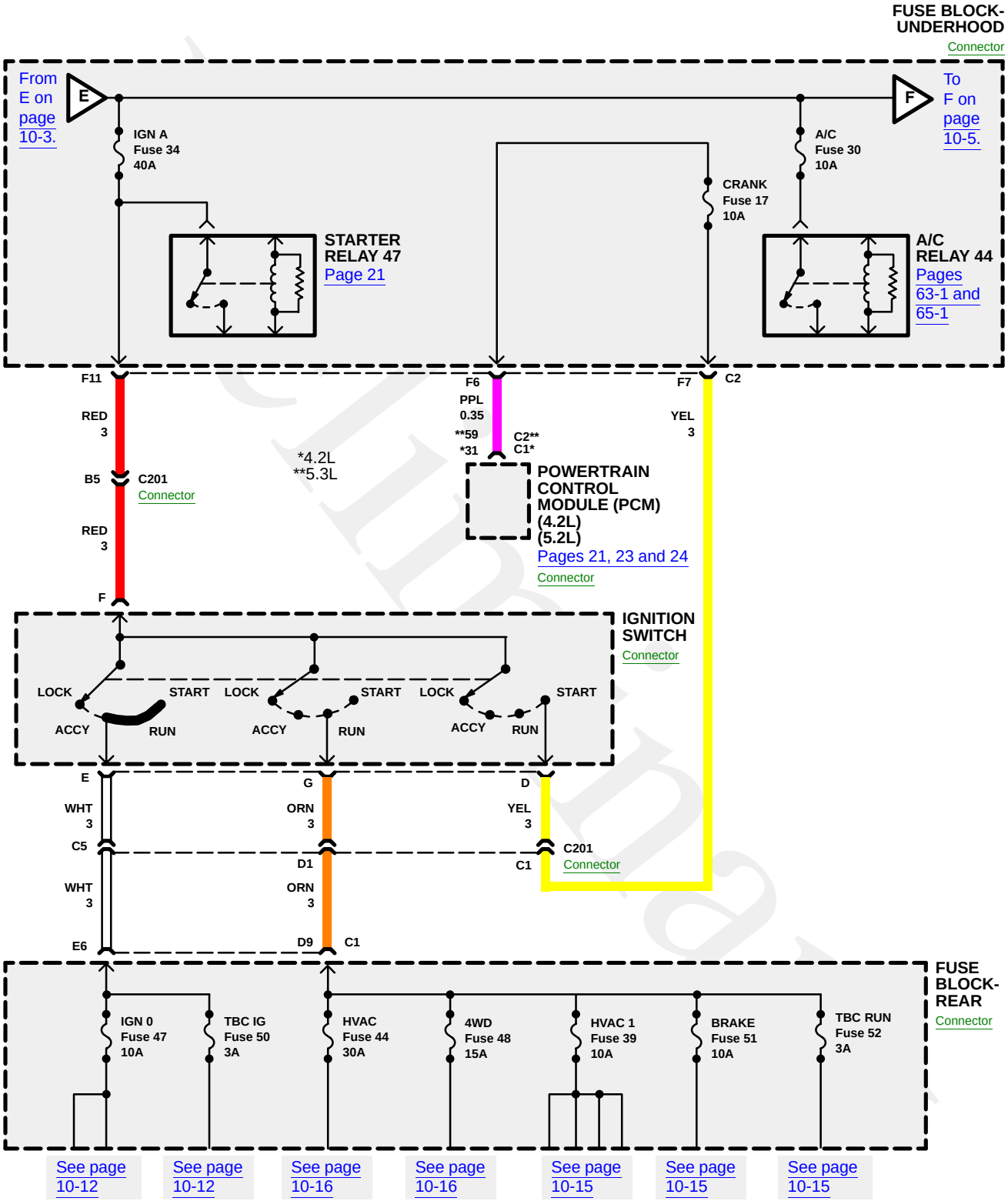

POWER DISTRIBUTION

Circuit Schematic

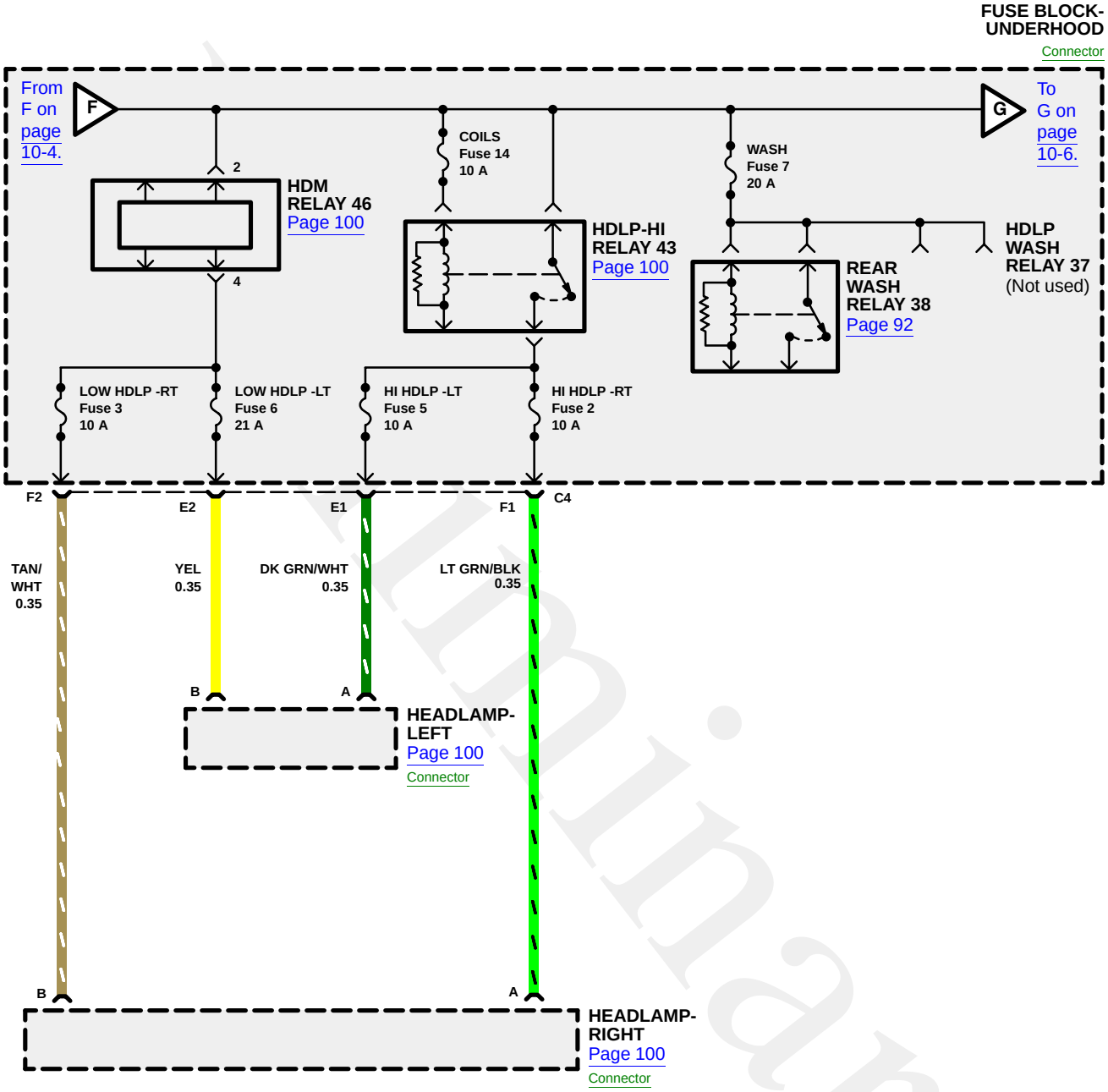

Preliminary

POWER DISTRIBUTION: 5.3L

Circuit Schematic

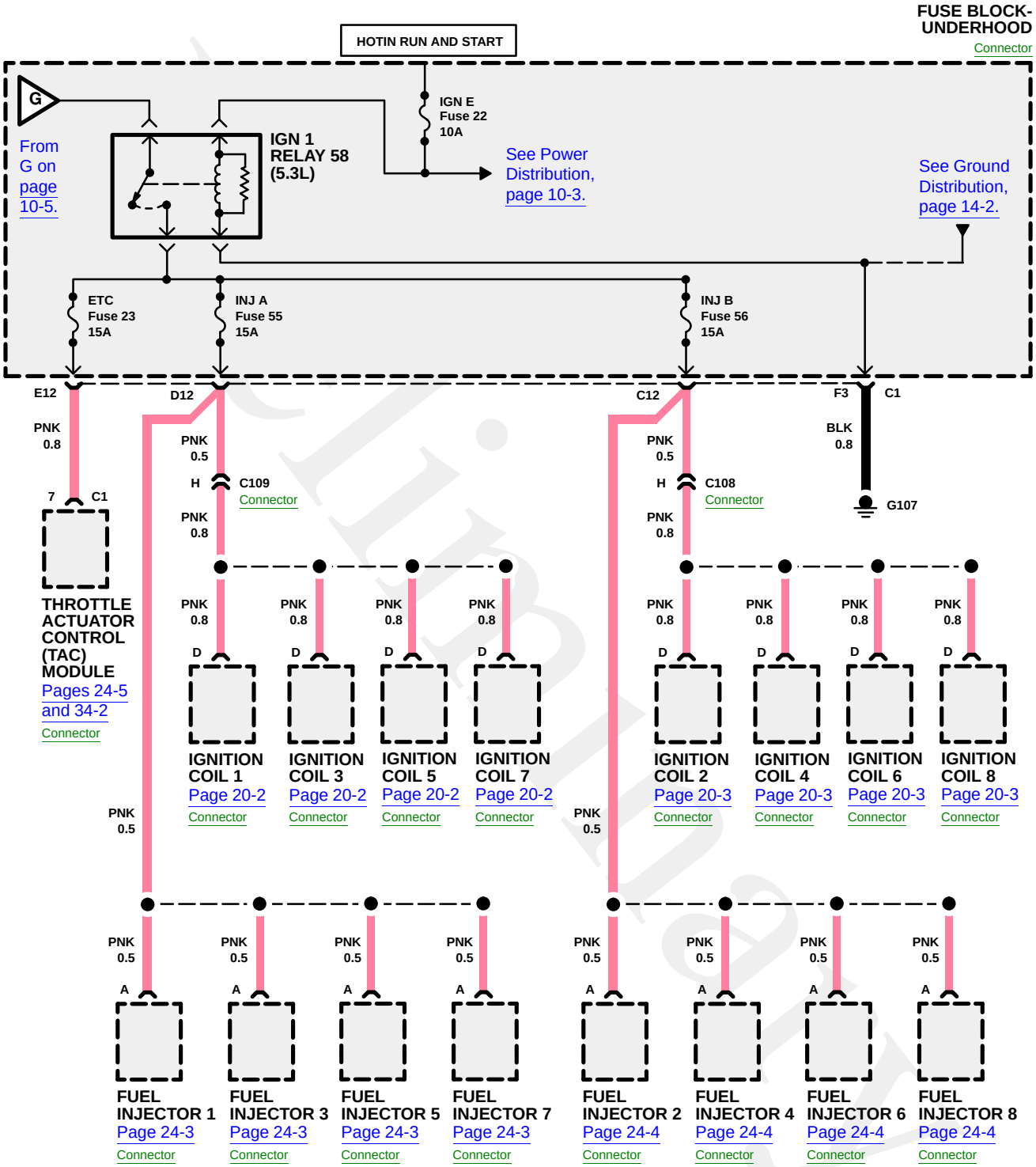

POWER DISTRIBUTION

Circuit Schematic

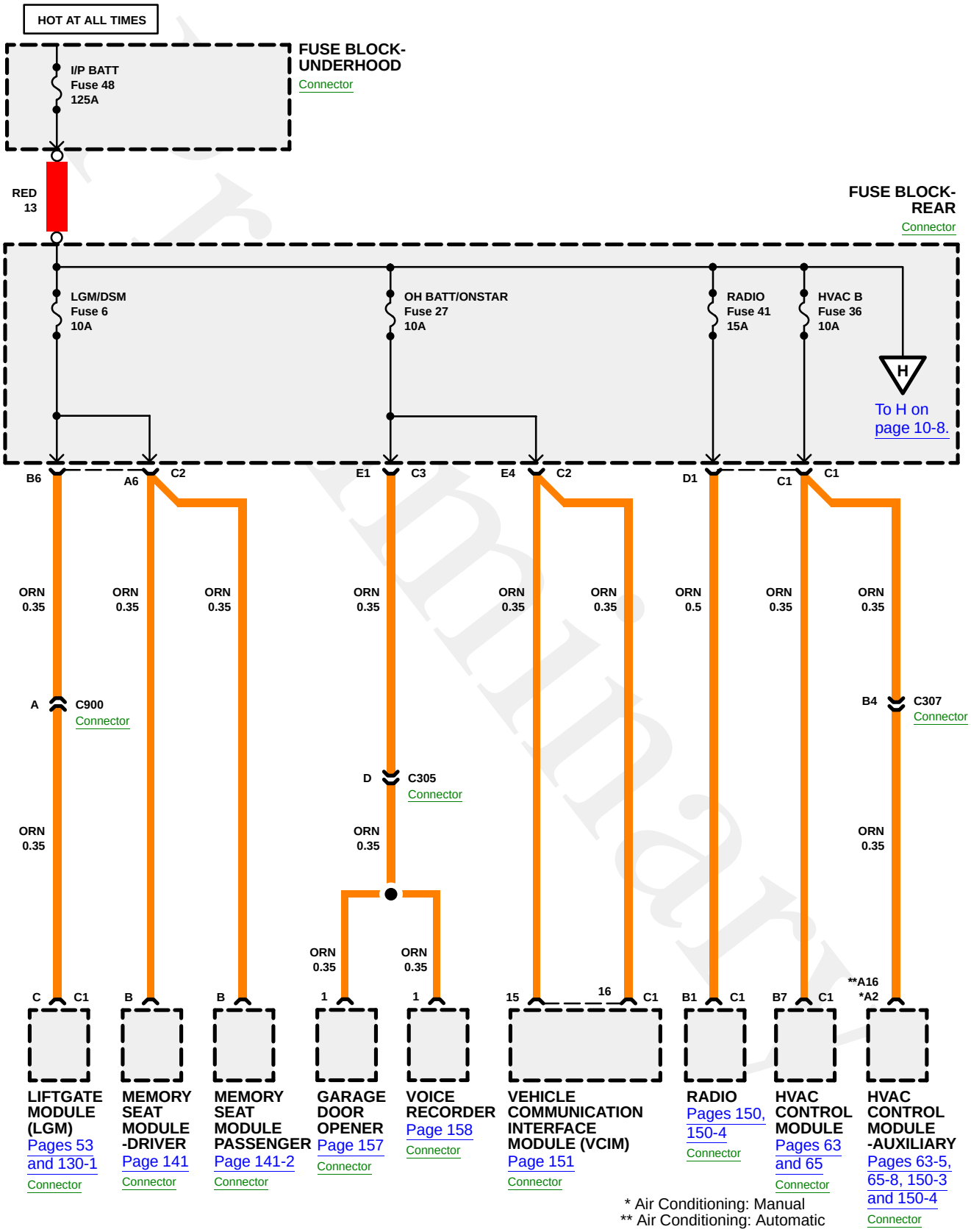

POWER DISTRIBUTION

Circuit Schematic

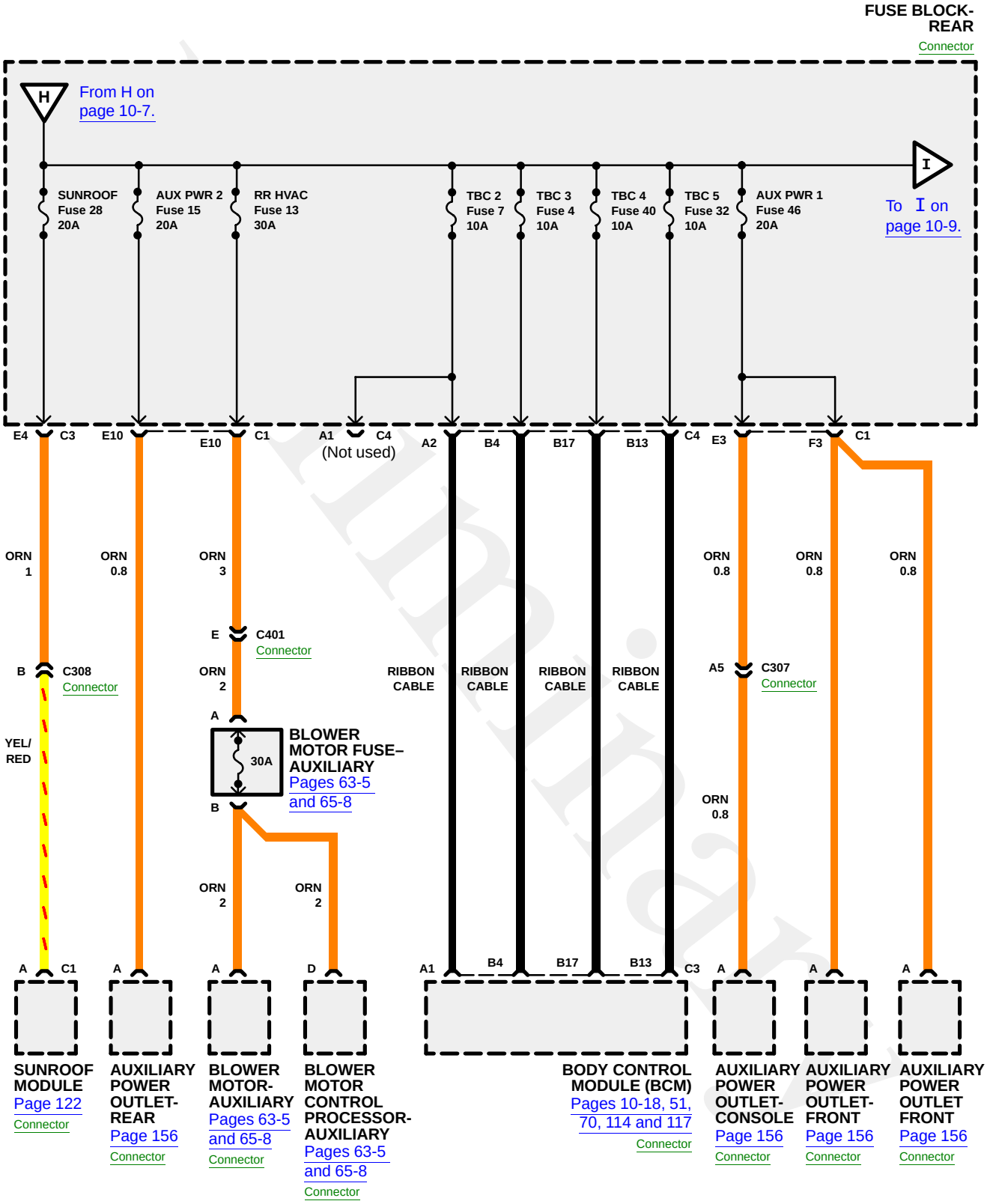

POWER DISTRIBUTION

Circuit Schematic

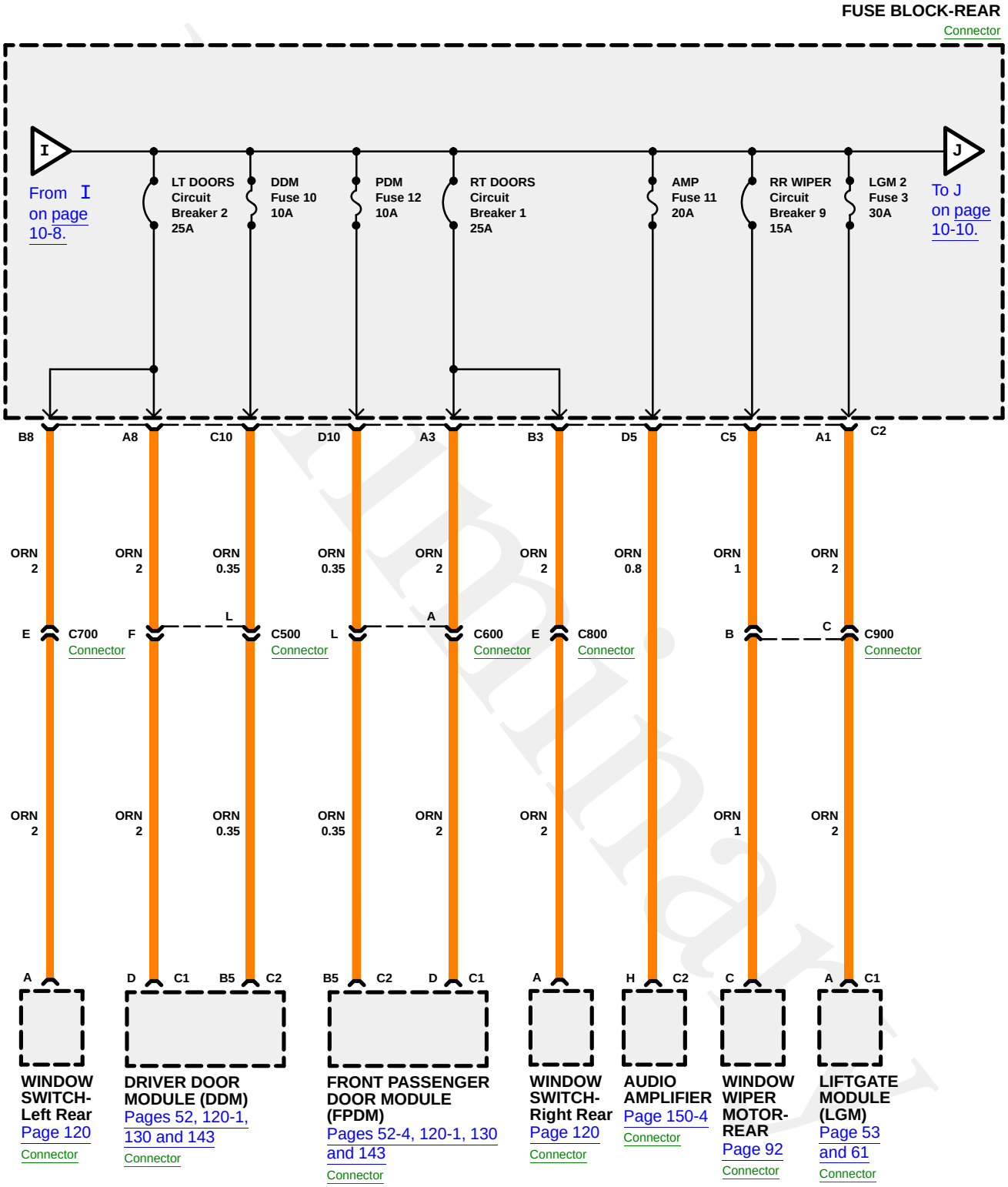

POWER DISTRIBUTION

Circuit Schematic

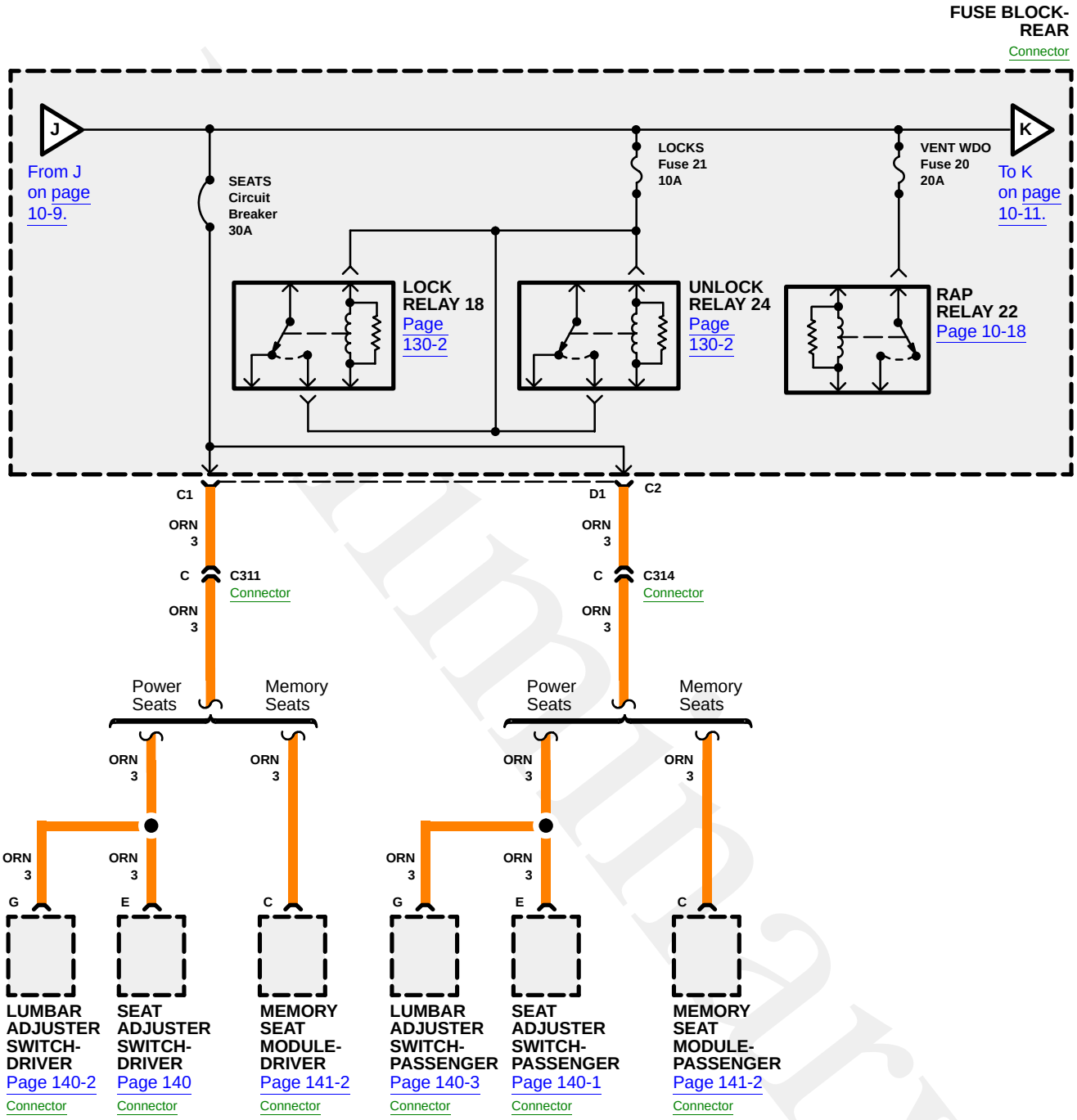

POWER DISTRIBUTION

Circuit Schematic

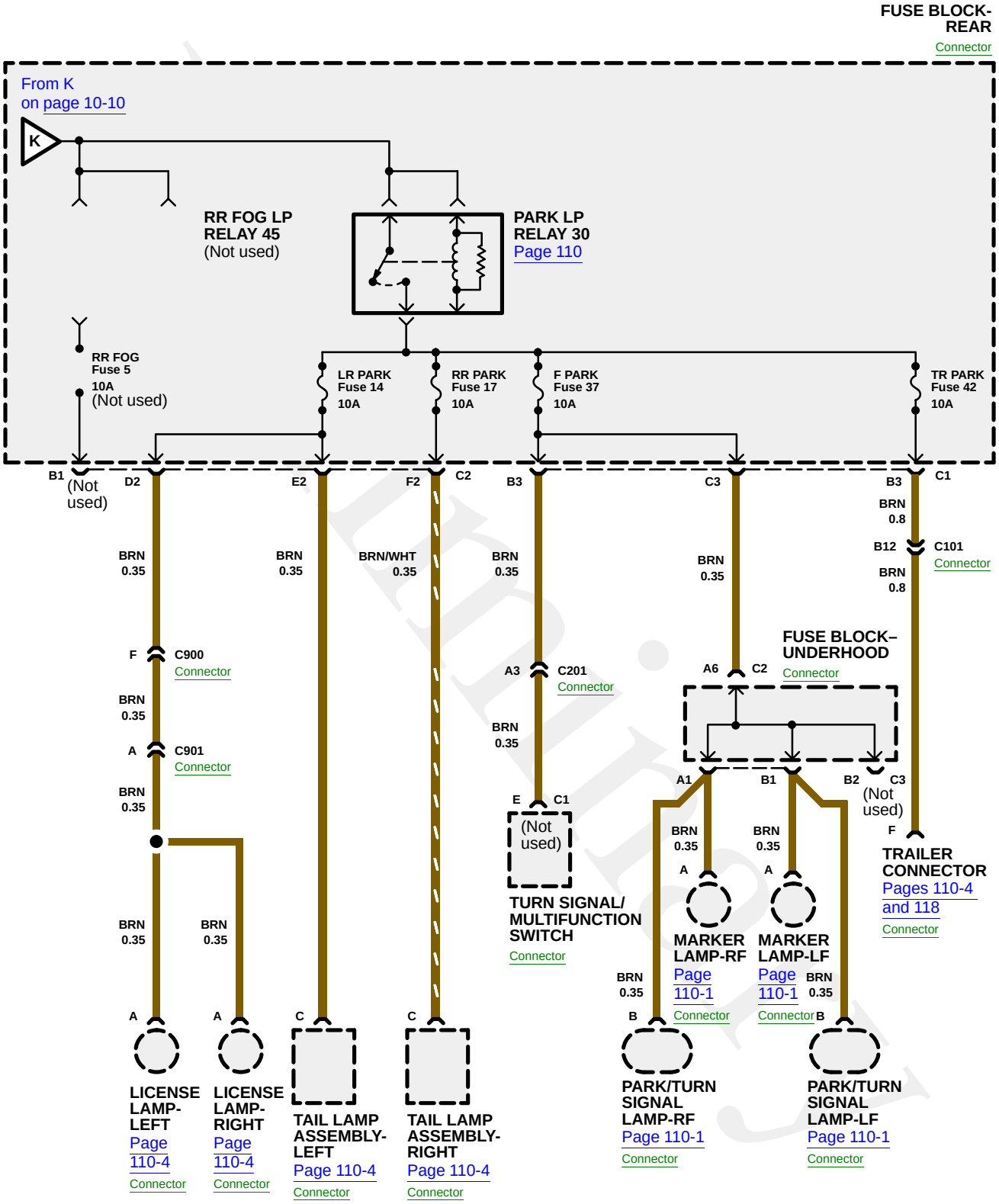

POWER DISTRIBUTION

Circuit Schematic

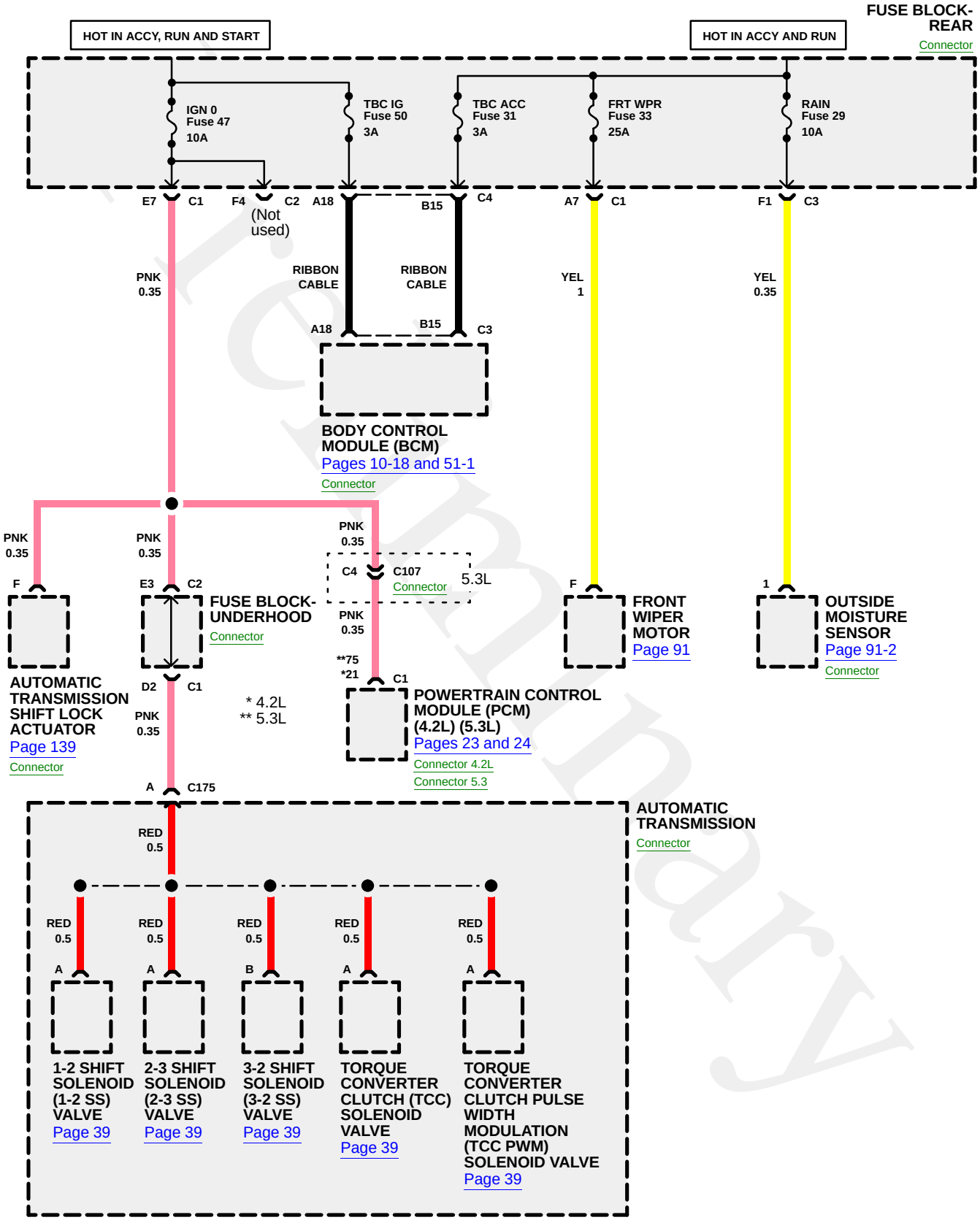

Preliminary

POWER DISTRIBUTION

Circuit Schematic

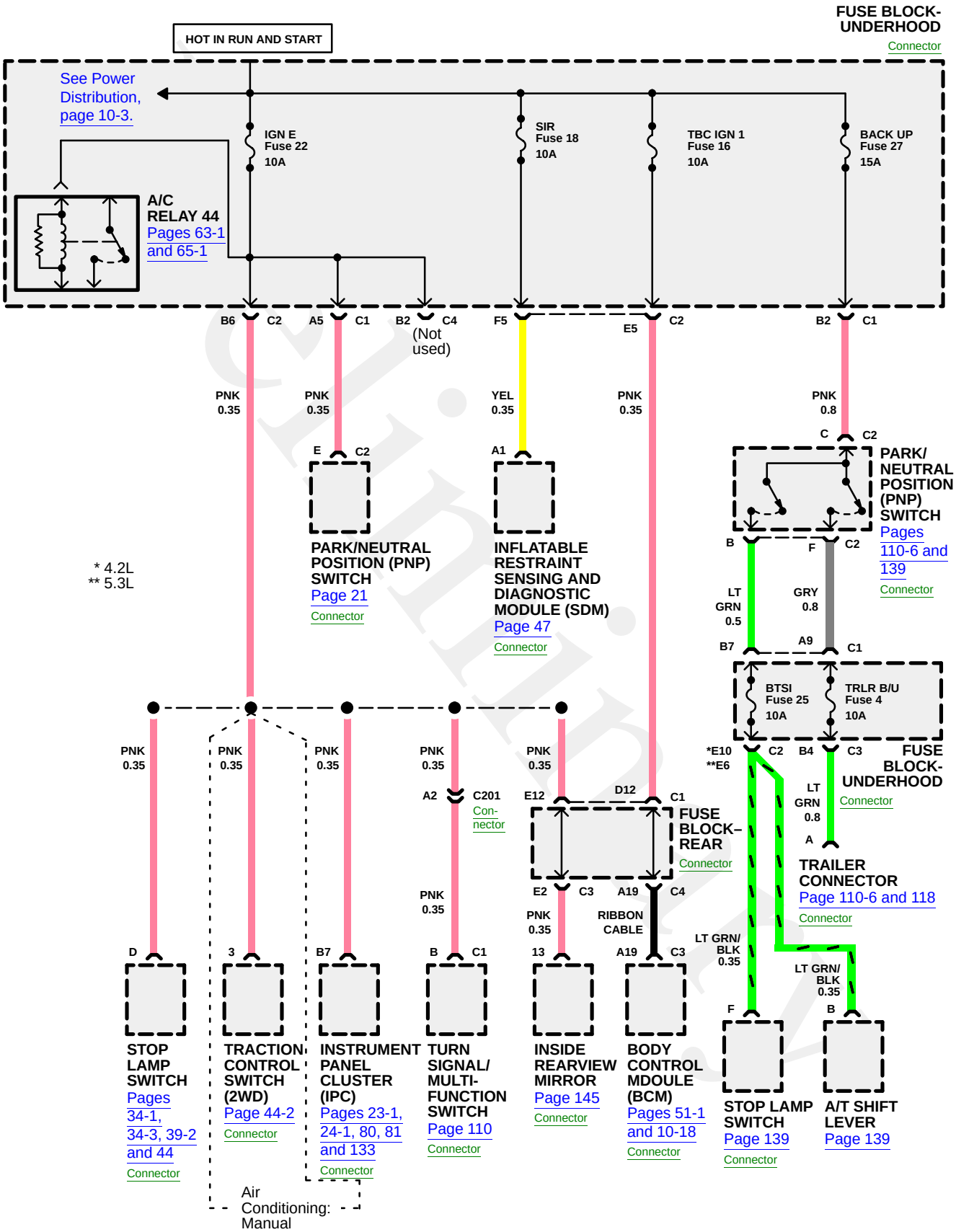

POWER DISTRIBUTION: 5.3L

Circuit Schematic

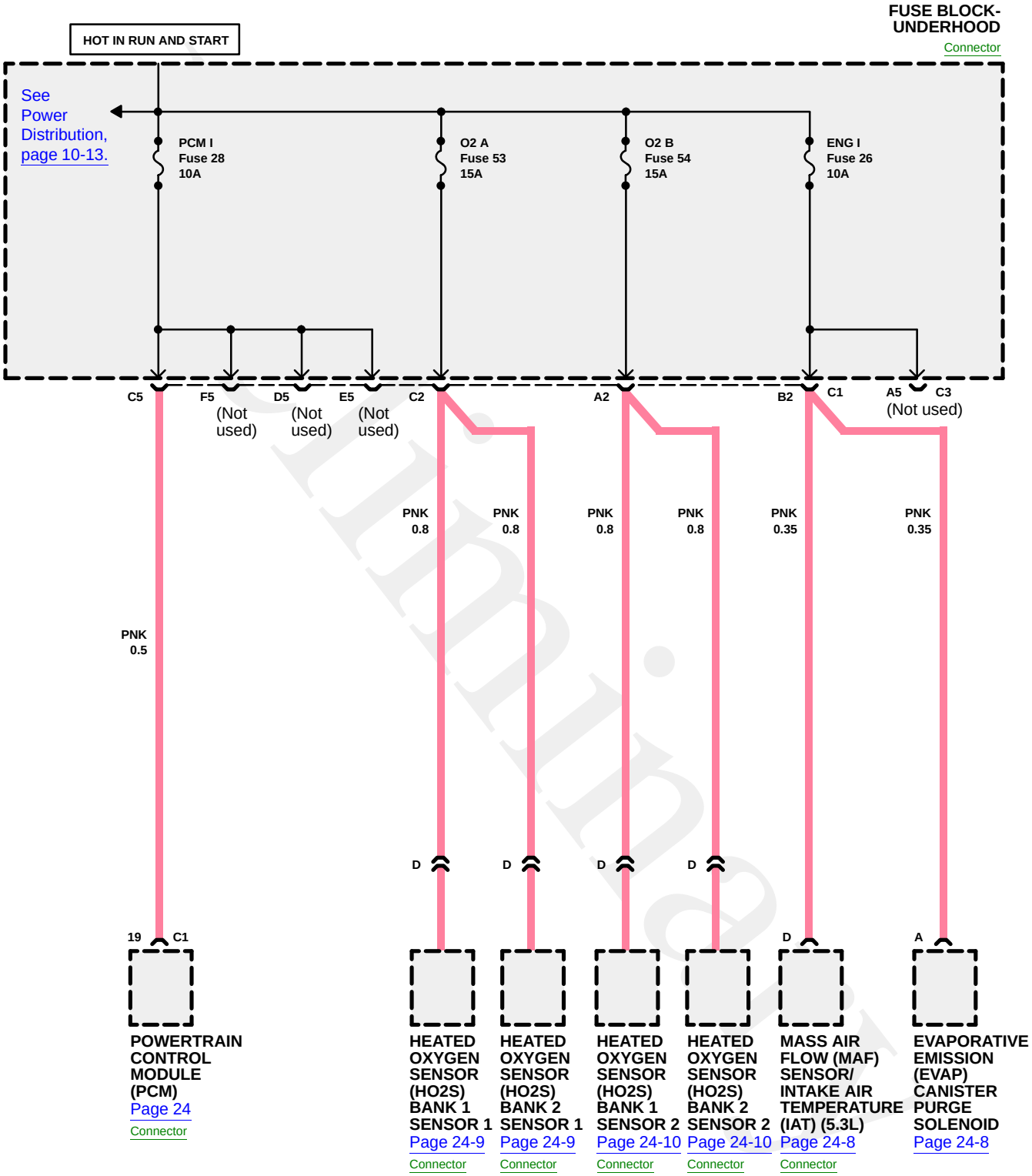

POWER DISTRIBUTION

Circuit Schematic

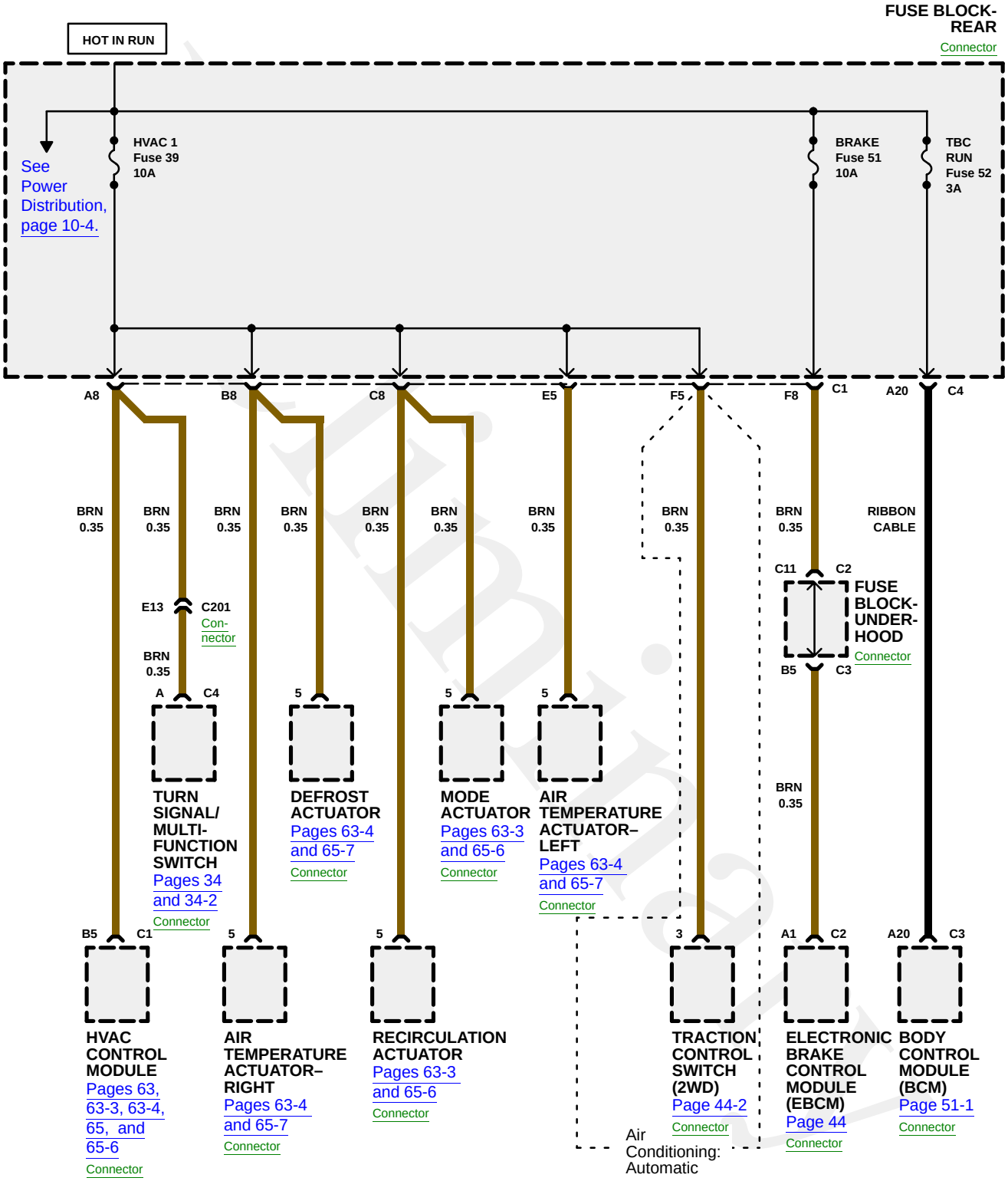

POWER DISTRIBUTION

Circuit Schematic

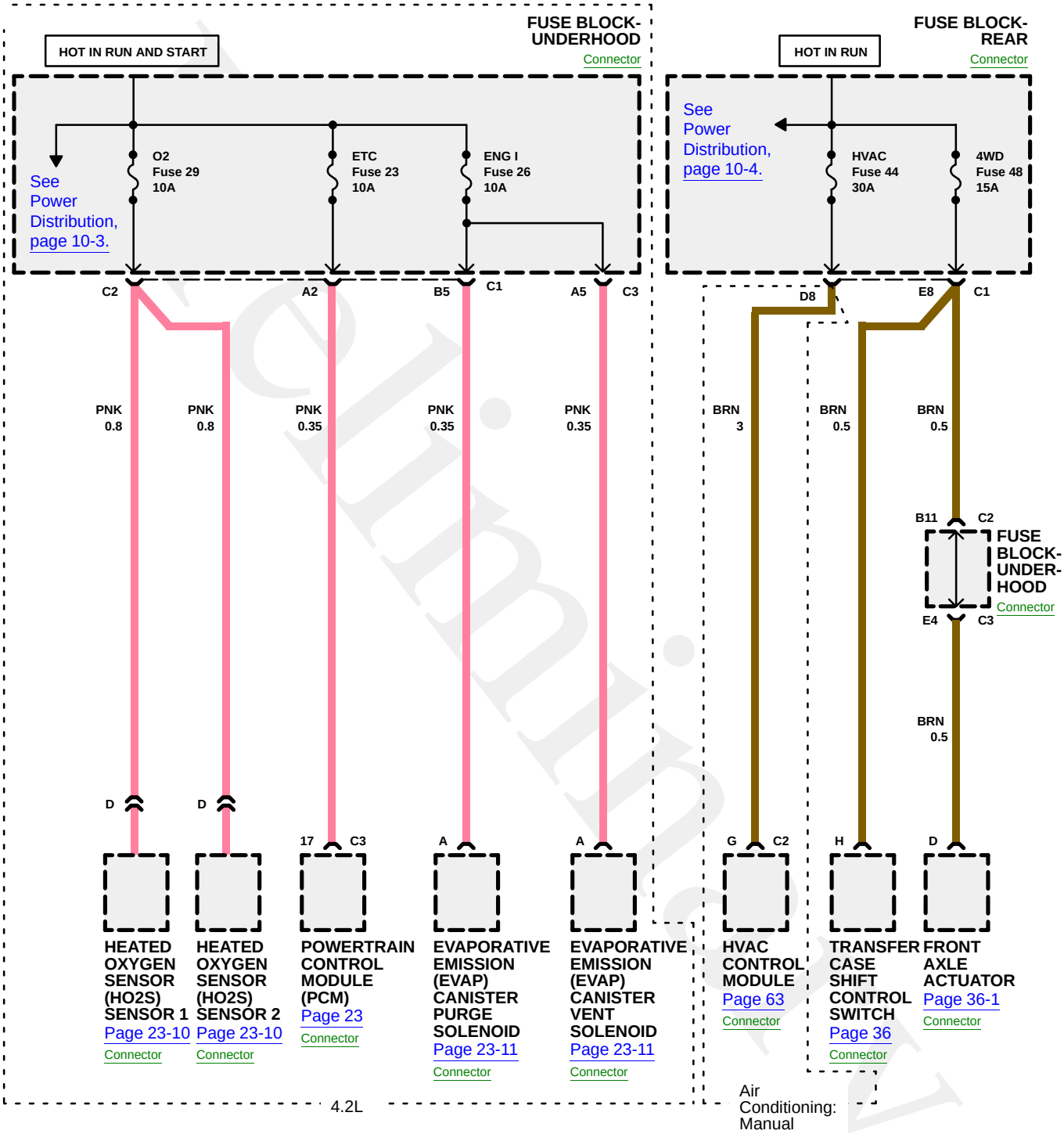

POWER DISTRIBUTION: 4.2L

Circuit Schematic

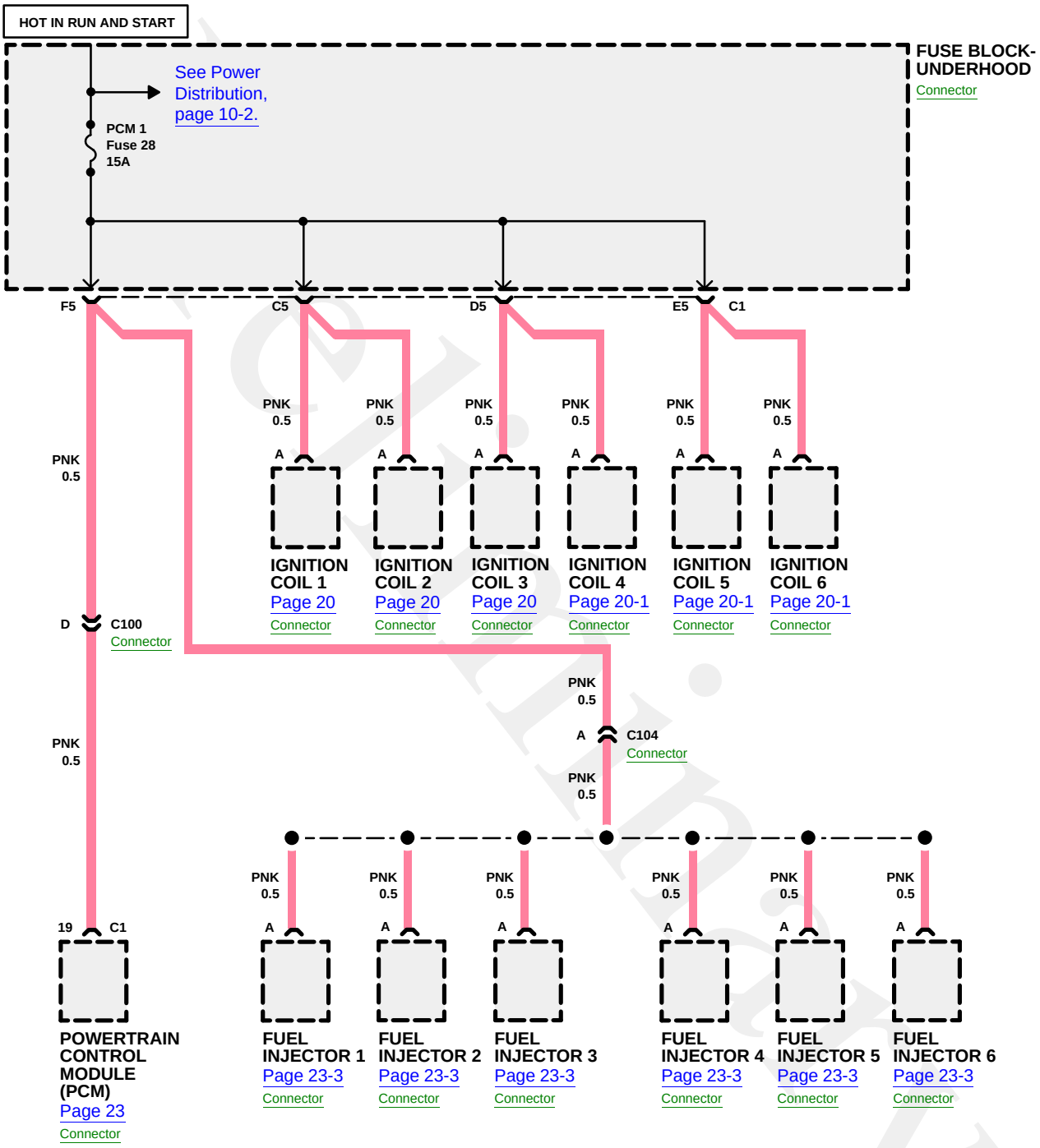

POWER DISTRIBUTION: RETAINED ACCESSORY POWER (RAP)

Circuit Schematic

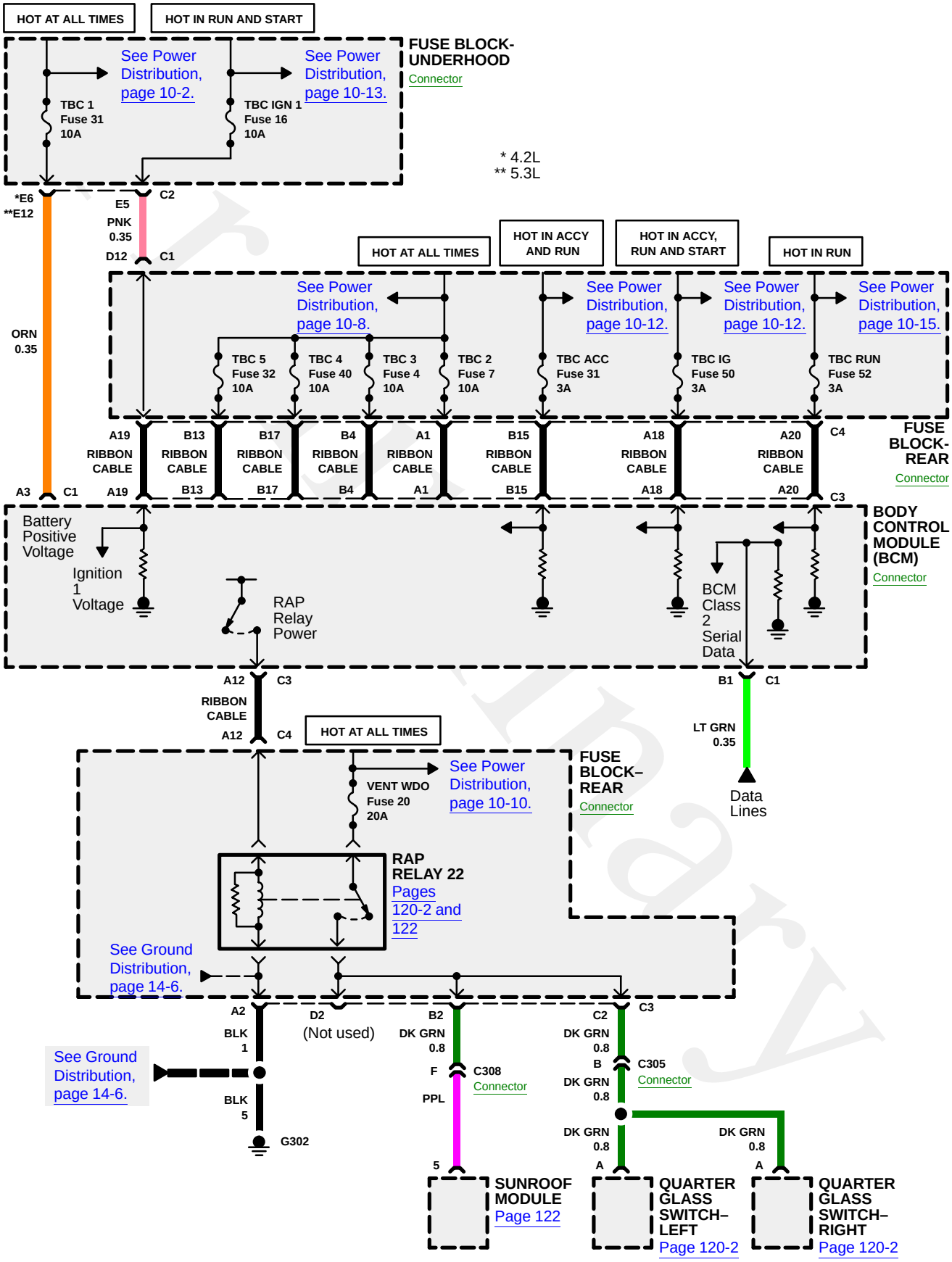

POWER DISTRIBUTION

Component Location Index

(Refer to Section 201 for photographs.)

Component		Photo No.
1-2 Shift Solenoid (1-2 SS) Valve	In transmission	45
2-3 Shift Solenoid (2-3 SS) Valve	In transmission	45
3-2 Shift Solenoid (3-2 SS) Valve	In transmission	45
A/C Relay 44	In the Underhood Fuse Block	49
A/T Shift Lever	In lower console	62
Air Temperature Actuator-Left	Below the I/P, above the accelerator	78
Air Temperature Actuator-Right	Behind right of the I/P center support	78
Audio Amplifier	Behind the left side panel of the rear compartment	108
Automatic Transmission Shift Lock Actuator	In lower console	62
Auxiliary Power Outlet-Console	At the rear of the lower console	85
Auxiliary Power Outlet-Front	In the center of the I/P, beside the cigar lighter	73
Auxiliary Power Outlet-Rear	Lower part of right D-Pillar	109
Blower Motor Control Module	Below right side of the I/P	79
Blower Motor Control Processor-Auxiliary	In the Rear HVAC Module, behind the right rear interior pane	
Blower Motor Resistor Assembly	On the bottom of the blower assembly	
Blower Motor-Auxiliary	Behind the interior right rear trim panel	111
Body Control Module (BCM)	On Rear Fuse Block, under left rear seat	53
Center High Mount Stoplamp (CHMSL)	At the top center of liftgate exterior	107
Cigar Lighter	In lower center of the I/P	73
Data Link Connector (DLC)	Below I/P, above the accelerator pedal	60
Defrost Actuator	On the cowl side of the upper I/P carrier	83
Driver Door Module (DDM)	On lower part of the driver door switch panel	95
Electronic Brake Control Module (EBCM)	Inner left side frame rail (near transmission)	41
Evaporative Emission (EVAP) Canister Purge Solenoid (4.2L)	Left side of engine	27
Evaporative Emission (EVAP) Canister Purge Solenoid (5.3L)	Top of engine	22
Evaporative Emission (EVAP) Canister Vent Solenoid	Rear of the fuel tank	115
F/PMP Relay 41	In the Underhood Fuse Block	51
Fan Relay 45	In the Underhood Fuse Block	51
Fog LP Relay 39	In the Underhood Fuse Block	49

Preliminary

POWER DISTRIBUTION

Component Location Index

(Refer to Section 201 for photographs.)

Component		Photo No.
Front Axle Actuator	Lower right front of engine (on oil pan)	39
Front Passenger Door Module (FPDM)	On lower part of passenger door switch panel	96
Front Wiper Motor	Under cowl cover (cover removed)	17
Fuel Injector 1 (4.2L)	Left side of engine	26
Fuel Injector 1 (5.3L)	Left bank of engine	
Fuel Injector 2 (4.2L)	Left side of engine	26
Fuel Injector 2 (5.3L)	Right bank of engine	
Fuel Injector 3 (4.2L)	Left side of engine	26
Fuel Injector 3 (5.3L)	Left bank of engine	
Fuel Injector 4 (4.2L)	Left side of engine	26
Fuel Injector 4 (5.3L)	Right bank of engine	
Fuel Injector 5 (4.2L)	Left side of engine	26
Fuel Injector 5 (5.3L)	Left bank of engine	
Fuel Injector 6 (4.2L)	Left side of engine	26
Fuel Injector 6 (5.3L)	Right bank of engine	
Fuel Injector 7 (5.3L)	Left bank of engine	
Fuel Injector 8 (5.3L)	Right bank of engine	
Fuse Block-Rear	Under the left rear seat	52
Fuse Block-Underhood	Left side of engine compartment	3
Garage Door Opener	In overhead console	91
Generator (4.2L)	Left Front of Engine	7
Generator (5.3L)	Top Left of Engine	8
HDLP-HI Relay 43	In the Underhood Fuse Block	50
HDM Relay 46	In the Underhood Fuse Block	50
Headlamp-Left	Left Front Engine Compartment	2
Headlamp-Right	Right Front Engine Compartment	2
Heated Oxygen Sensor (HO2S) 1 (4.2L)	Right front of engine	13
Heated Oxygen Sensor (HO2S) 2 (4.2L)	Right side of transmission	45
Heated Oxygen Sensor (HO2S) Bank 1 Sensor 1 (5.3L)	Left exhaust downpipe	47
Heated Oxygen Sensor (HO2S) Bank 1 Sensor 2 (5.3L)	Left exhaust pownpipe	47
Heated Oxygen Sensor (HO2S) Bank 2 Sensor 1 (5.3L)	Right exhaust downpipe	46
Heated Oxygen Sensor (HO2S) Bank 2 Sensor 2 (5.3L)	Right exhaust downpipe	46
Horn Relay 40	In the Underhood Fuse Block	49
HVAC Control Module	In the IP center trim panel, beneath the radio	75
HVAC Control Module-Auxiliary	At rear of lower console	85
IGN 1 Relay 58 (5.3L)	In the Underhood Fuse Block	51

Preliminary

POWER DISTRIBUTION

Component Location Index

(Refer to Section 201 for photographs.)

Component		Photo No.
Ignition Coil 1 (4.2L)	Top of engine	16
Ignition Coil 1 (5.3L)	Top left side of engine	23
Ignition Coil 2 (4.2L)	Top of engine	16
Ignition Coil 2 (5.3L)	Top right side of engine	20
Ignition Coil 3 (4.2L)	Top of engine	16
Ignition Coil 3 (5.3L)	Top left side of engine	23
Ignition Coil 4 (4.2L)	Top of engine	16
Ignition Coil 4 (5.3L)	Top right side of engine	20
Ignition Coil 5 (4.2L)	Top of engine	16
Ignition Coil 5 (5.3L)	Top left side of engine	23
Ignition Coil 6 (4.2L)	Top of engine	16
Ignition Coil 6 (5.3L)	Top right side of engine	20
Ignition Coil 7 (5.3L)	Top left side of engine	23
Ignition Coil 8 (5.3L)	Top right side of engine	20
Ignition Switch	In right side of steering column	66
Inflatable Restraint Sensing and Diagnostic Module (SDM)	Beneath the lower console	87
Inside Rearview Mirror	Upper center of windshield	88
Instrument Panel Cluster (IPC)	On the left side of the IP, above the steering column	59
License Lamp-Left	On liftgate	
License Lamp-Right	On liftgate	
Liftgate Module (LGM)	Inside the liftgate	113
Lock Relay 18	In the Rear Fuse Block	54
Lumbar Adjuster Switch-Driver	On the lower seat, on the side toward the LF door	117
Lumbar Adjuster Switch-Passenger	On the lower seat on the side toward the RF Door	117
Mass Air Flow (MAF) Sensor/ Intake Air Temperature (IAT) (5.3L)	Right front of engine compartment	21
Memory Seat Module-Driver	Mounted on underside of seat	121
Memory Seat Module-Passenger	Mounted on underside of seat	121
Mode Actuator	Behind I/P, left of the I/P center support	83
Outside Moisture Sensor	Attached to windshield, near inside rearview mirror	
Park LP Relay 30	In the Rear Fuse Block	55
Park/Neutral Position (PNP) Switch	Left side of transmission	40
Powertrain Control Module (PCM) (4.2L)	Left front of engine	5
Powertrain Control Module (PCM) (5.3L)	Left front of engine compartment	25

Preliminary

POWER DISTRIBUTION

Component Location Index

(Refer to Section 201 for photographs.)

Component		Photo No.
Quarter Glass Switch-Left	In upper console	91
Quarter Glass Switch-Right	In upper console	91
Radio	Center of I/P	74
RAP Relay 22	In the Rear Fuse Block	55
Rear Wash Relay 38	In the Underhood Fuse Block	49
Recirculation Actuator	Above the blower motor, on the right side of the I/P carrier	
Seat Adjuster Switch-Driver	On the lower seat on the side toward the LF Door	117
Seat Adjuster Switch-Front Passenger	On the lower seat on the side toward the RF Door	117
Starter (4.2L)	Left rear of engine	
Starter (5.3L)	Right rear of engine	
Starter Relay 47	In the Underhood Fuse Block	49
Stop Lamp Switch	On brake pedal support	64
Sunroof Module	Above the headliner, at the rear of the sunroof	56
Tail Lamp Assembly-Left	At the left rear of the vehicle	112
Tail Lamp Assembly-Right	At the right rear of the vehicle	112
Throttle Actuator Control (TAC) Module (5.3L)	Left rear of engine compartment	18
Torque Converter Clutch (TCC) Solenoid Valve	In transmission	45
Torque Converter Clutch Pulse Width Modulated (TCC PWM) Solenoid Valve	In transmission	45
Traction Control Switch (2WD)	In center of the I/P	92
Transfer Case Encoder	Left rear of transfer case	44
Transfer Case Shift Control Module (4WD)	Behind the left lower I/P	58
Transfer Case Shift Control Switch	In lower center of the I/P	73
Turn Signal/Hazard Flasher Module	Below the left side of I/P	57
Turn Signal/Multifunction Switch	On the stalk, on the left side of the steering column	71
Unlock Relay 24	In the Rear Fuse Block	54
Vehicle Communication Interface Module (VCIM)	Under right rear seat	65
Voice Recorder	In the upper console	91
W/S Wash Relay 42	In the Underhood Fuse Block	50
Window Switch-Left Rear	Mounted on the interior side of the left rear door	
Window Switch-Right Rear	Mounted on the interior side of the right rear door	
Window Wiper Motor-Rear	Inside the liftgate	113

Preliminary

POWER DISTRIBUTION

Component Location Index

(Refer to Section 201 for photographs.)

Connector

C100 (4.2L) (10-BLK) . . . . . Left front of engine 5
C101 (38-BLK) . . . . . Left side of engine compartment 3
C104 (4.2L) (8-BLK) . . . . . Top of engine 16
C107 (5.3L) (38-BLK) . . . . . Left rear of engine compartment 18
C108 (5.3L) (8-LT GRY) . . . . . Top right side of engine 20
C109 (5.3L) (8-LT GRY) . . . . . Top left side of engine 23
C201 (17-BLK), (18-BLK), and (13-GRY) . . . . . At base of steering column 120
C305 (16-BLK) . . . . . Inside upper console 91
C307 (18-MD GRY) . . . . . Beneath rear of lower console 86
C308 (6-BLK) . . . . . Above the left rear door 56
C311 (10-BLK) . . . . . Lower front of driver's seat 117
C314 (10-BLK) . . . . . Lower front of passenger's seat 117
C401 (12-BLK) . . . . . Behind right rear body side panel 111
C500 (12-BLK) . . . . . Midpoint of leading edge of left front door 93
C600 (12-BLK) . . . . . Midpoint of leading edge of right front door 93
C700 (17-NAT) . . . . . Midpoint of leading edge of left rear door 94
C800 (17-NAT) . . . . . Midpoint of leading edge of right rear door 94
C900 (6-BLK) . . . . . Top of the liftgate 107
C901 (2-GRY) . . . . . Inside the liftgate 113
Trailer Connector . . . . . Below the center of the rear bumper 116

Ground

G101 . . . . . Left side of engine compartment 4
G106 . . . . . Left front wheel well 34
G107 (4.2L) . . . . . Lower left side of engine 37
G107 (5.3L) . . . . . Lower left side of engine 38
G110 (4.2L) . . . . . Lower left side of engine 37
G110 (5.3L) . . . . . Lower left side of engine 38
G302 . . . . . On the lower left B-pillar 105

Preliminary